User's Guide
SLAU215–May 2007

TSC2004EVM and TSC2004EVM-PDK

This user's guide describes the characteristics, operation, and use of the TSC2004 evaluation module (EVM), both by itself and as part of the TSC2004EVM-PDK. This EVM is a 4-wire resistive touch screen controller evaluation module which also has auxiliary-input and temperature measurement capabilities. A complete circuit description, schematic diagram, and bill of materials are included.

Contents

1 EVM Overview 2
2 Analog Interface 2
3 Digital Interface 3
4 Power Supplies 3
5 EVM Operation 5
6 Kit Operation 6
7 EVM Bill of Materials and Schematic 17
8 References 20

List of Figures

1 TSC2004EVM-PDK Block Diagram 6
2 I^2C Address Settings 7
3 Interface GUI 8
4 Configuration Tab of Software GUI Screen 11
5 Command Line Interface Tab 13
6 Read All Threshold Registers 14
7 Open Script File and Load to Command Buffer 16

List of Tables

1 Analog Interface Pinout 2
2 Digital Interface Pinout 3
3 Power Supply Pinout 3
4 VREF Selection Options – JMP1 5
5 List of Jumpers 5
6 Script Command Type 14
7 Eligible TSC2004 Configuration Register Address (in Hexadecimal) 15
8 TSC2004EVM Bill of Materials 17
9 USB-MODEVM Bill of Materials 19

Windows is a trademark of Microsoft Corporation.

1 EVM Overview

1.1 Features

- Full-featured evaluation board for the TSC2004 4-wire resistive touch screen controller (TSC)
- Modular design for use with a variety of DSP and microcontroller interface boards

The TSC2004EVM-PDK is a complete evaluation kit, which includes a USB-based motherboard and evaluation software for use with a personal computer running Microsoft Windows™ operating systems.

1.2 Introduction

The TSC2004EVM is in a Texas Instruments modular EVM form factor, which allows direct evaluation of the TSC2004 performance and operating characteristics and eases software development and system prototyping. This EVM is compatible with the 5-6K Interface Board (SLAU104) from Texas Instruments and additional third-party boards such as the HPA449 demonstration board from SoftBaugh, Inc. (www.softbaugh.com) and the NI Speedy-33 from National Instruments. (www.ni.com).

The TSC2004EVM-PDK is a complete evaluation/demonstration kit, which includes a USB-based motherboard called the USB-MODEVM Interface Board and evaluation software for use with a personal computer running Microsoft Windows™ operating systems.

2 Analog Interface

For maximum flexibility, the TSC2004EVM is designed for easy interfacing to multiple analog sources. Samtec part numbers SSW-110-22-F-D-VS-K and TSM-110-01-T-DV-P provide a convenient 10-pin, dual-row, header/socket combination at J1. This header/socket provides access to the analog input pins of the TSC. Consult Samtec at www.samtec.com or call 1-800-SAMTEC-9 for a variety of mating connector options.

Table 1. Analog Interface Pinout

Pin Number	Signal	Description
J1.2	X+	Touch screen X+ electrode
J1.4	X–	Touch screen X- electrode
J1.6	Y+	Touch screen Y+ electrode
J1.8	Y–	Touch screen Y- electrode
J1.10	Unused	
J1.12	AUX	Auxiliary input, 0 V to VREF
J1.14	Unused	
J1.16	Unused	
J1.18	REF(–)	Tied to analog ground
J1.20	REF(+)	External reference source input
J1.1 J1.3 J1.5 J1.7 J1.15	Unused	
J1.9 J1.11 J1.13 J1.17 J1.19	AGND	Analog ground connections

3 Digital Interface

The TSC2004EVM is designed to easily interface with multiple control platforms. Samtec part numbers SSW-110-22-F-D-VS-K and TSM-110-01-T-DV-P provide a convenient 10-pin, dual-row, header/socket combination at J2. This header/socket provides access to the digital control and serial data pins of the TSC. Consult Samtec at www.samtec.com or call 1-800-SAMTEC-9 for a variety of mating connector options.

Table 2. Digital Interface Pinout

Pin Number	Signal	Description
J2.1	Unused	
J2.2	Unused	
J2.3	Unused	
J2.4	DGND	Digital ground
J2.5	Unused	
J2.6	Unused	
J2.7	Unused	
J2.8	Unused	
J2.9	Unused	
J2.10	DGND	Digital ground
J2.11	Unused	
J2.12	Unused	
J2.13	Unused	
J2.14	$\overline{\text{RESET}}$	Hardware reset to TSC2004
J2.15	$\overline{\text{PINTDAV}}$	PENIRQ Pen interrupt output from TSC
J2.16	SCL	I2C bus serial clock
J2.17	Unused	
J2.18	DGND	Digital ground
J2.19	Unused	
J2.20	SDA	I2C bus serial data line

4 Power Supplies

J3 provides connection to the common power bus for the TSC2004EVM. Power is supplied on the pins listed in Table 3.

Table 3. Power Supply Pinout

Signal	Pin Number		Signal
Unused	1	2	Unused
+5VA	3	4	Unused
DGND	5	6	AGND
+1.8VD	7	8	+VD1
+3.3VD	9	10	+5VD

When power is supplied to J3, JMP4 allows for one of three different DC voltages to be applied to the digital interface and IO of the TSC; and JMP2 selects power to TSC2004 SNSVDD. See the schematic and printed circuit board silkscreen for details.

The TSC2004EVM-PDK motherboard (the USB-MODEVM Interface Board) supplies power to J3 of the TSC2004EVM. Power for the motherboard is supplied either through its USB connection or on terminal blocks on the board.

4.1 TSC Power

Power for the TSC2004 SNSVDD, analog, and sense driver power supply, can be supplied either from +1.8 V or from +3.3 V, selected by setting JMP2. When the shunt is installed on JMP2 pins 1-2, power SNSVDD come from J3.7 (+1.8VD) through an inductor to prevent digital noise from coupling into the analog supply. When the shunt is installed on JMP2 pins 2-3, power SNSVDD come from J3.9 (+3.3VD) through an inductor to prevent digital noise from coupling into the analog supply. Also, the user can remove the shunt and connect an external power supply to the pin 2 of JMP2 if other than 1.8-V or 3.3-V power is used. By default factory setting, SNSVDD is set to +3.3VD, shunt on JMP2 pins 2-3.

Power for the TSC2004 IOVDD and digital IO power supply is selected using JMP4, either 1.8V or 3.3V or SNSVDD. When JMP4 is in the default factory condition (shunt on pins 3-4), power to the TSC is connected to the same power supply as SNSVDD.

4.2 Stand-Alone Operation

When used as a stand-alone EVM, the analog power can be applied to TP1 (SNSVDD) and referenced to TP4 (GND). IOVDD can be applied to TP2 (IOVDD) and referenced to TP4.

CAUTION

Verify that all power supplies are within the safe operating limits shown on the TSC2004 data sheet before applying power to the EVM.

4.3 USB-MODEVM Interface Power

The USB-MODEVM Interface Board can be powered from several different sources:

- USB
- 6-VDC to 10-VDC AC/DC wall supply (not included)
- Laboratory power supply

When powered from the USB connection, JMP6 should have a shunt from pins 1-2 (this is the default factory configuration). When powered from 6-VDC to 10-VDC, either through the J8 terminal block or J9 barrel jack, JMP6 should have a shunt installed on pins 2-3. If power is applied in any of these ways, onboard regulators generate the required supply voltages and no further power supplies are necessary.

If laboratory supplies are used to provide the individual voltages required by the USB-MODEVM Interface Board, JMP6 should have no shunt installed. Voltages then are applied to J2 (+5VA), J3 (+5VD), J4 (+1.8VD), and J5 (+3.3VD). The +1.8VD and +3.3VD can also be generated on the board by the onboard regulators from the +5VD supply; to enable this, the SW1 switches need to be set in the ON position (lower position, looking at the board with text reading right-side up) to enable the regulators. If +1.8VD and +3.3VD are supplied externally, disable the onboard regulators by placing the SW1 switches in the OFF position.

Each power-supply voltage has an LED (D1–D7) which lights when the power supplies are active.

4.4 Reference Voltage

The reference voltage can be provided on the board from SNSVDD on TSC2004EVM. An external reference can be supplied through J1 pin 20 referenced to analog ground (J1 pin 18 on the TSC2004EVM), or through TP3 (VREF) referenced on TP4(GND) on the TSC2004EVM. JMP1 must be set correspondingly, as shown in Table 4.

Table 4. VREF Selection Options – JMP1

Shunt on Pins	VREF Selection
1-2	External from J1.20
2-3	On the board from SNSVDD
Removed	External from TP3

CAUTION

Verify that the external reference voltage is within the safe operating limits shown on the TSC2004 data sheet before applying power to the EVM.

5 EVM Operation

The following section provides information on the analog input, digital control, and general operating conditions of the TSC2004EVM.

5.1 Analog Input

The analog input sources (touch screen and auxiliary input) can be applied directly to J1 (top or bottom side) or through signal-conditioning modules available for the modular EVM system.

5.2 Digital Control

The digital control signals can be applied directly to J2 (top or bottom side). The modular TSC2004EVM also can be connected directly to a DSP or microcontroller interface board, such as the HPA449, or to the USB-MODEVM Interface Board if purchased as part of the TSC2004EVM-PDK. For a current list of compatible interface and/or accessory boards for the EVM or the TSC2004, see the relevant product folder on the TI Web site.

5.3 Default Jumper Locations

Table 5 provides a list of jumpers found on the EVM and their factory default conditions.

Table 5. List of Jumpers

Jumper	Description	Default Shunt Position
JMP1	Reference Voltage Selection – 1-2: external VREF 2-3: on-board SNSVDD	2-3 (onboard or SNSVDD)
JMP2	Analog Power or SNSVDD Select – 1-2: +1.8VD 2-3: +3.3VD	2-3 (+3.3VD)
JMP3	EEPROM Address Select – Installed: firmware for the motherboard from the EEPROM onboard the TSC2004EVM Removed: firmware for the motherboard from the EEPROM on motherboard	Installed (FW from EEPROM on TSC2004EVM board)
JMP4	IOVDD Power Select – 2-4: IOVDD from J3.7 (+1.8VD) 3-4: IOVDD from SNSVDD 4-6: IOVDD from J3.9 (+3.3VD)	3-4 (= SNSVDD)
JMP5	TSC2004 I^2C Address Bit A0. Uninstalled A0 = 1.	Installed (A0 = 0)
JMP6	TSC2004 I^2C Address Bit A1. Uninstalled A1 = 1.	Installed (A1 = 0)

6 Kit Operation

The following section provides information on using the TSC2004EVM-PDK, including setup, program installation, and program usage.

6.1 TSC2004EVM-PDK Block Diagram

A block diagram of the TSC2004EVM-PDK is shown in Figure 1. The evaluation kit consists of two circuit boards connected together. The motherboard is designated as the USB-MODEVM Interface board; the daughtercard is the TSC2004EVM.

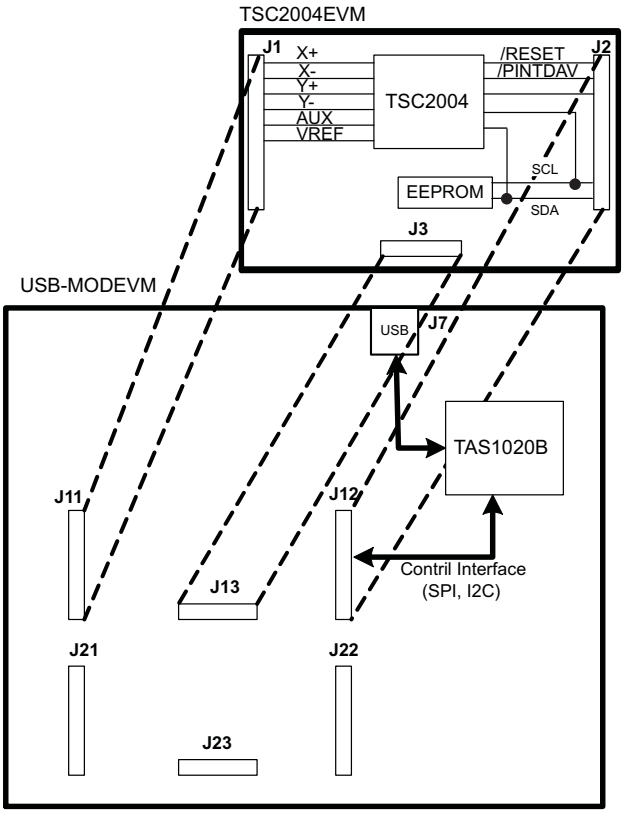

Figure 1. TSC2004EVM-PDK Block Diagram

The USB-MODEVM Interface board is intended to be used in USB mode, where control of the installed EVM is accomplished using the onboard USB controller device. However, provision is made for driving all the buses (I2C and/or SPI) externally. The source of these signals is controlled by SW2 on the USB-MODEVM. For more details, see the USB-MODEVM Interface Board schematic in Section 7.2.

6.2 Quick Start

Ensure that the TSC2004EVM is installed on the USB-MODEVM Interface Board. The TSC2004EVM should be installed in the topmost position, using J11, J12, and J13 on the USB-MODEVM, as shown in Figure 1 .

Place the CD-ROM into your PC's CD-ROM drive. Install TSC2004EVM– PDK Software.

The installation procedure is:

1. Go to the Installer directory on TSC2004-EVM-PDK CD-ROM, and run setup.exe, found in the Installer directory.
2. Accept the license agreement, and continue the installation.
3. Follow the instructions and prompts given.

4. When this completes, click Finish on the TSC2004EVM installer window.
5. Restart your computer. (This step may not be necessary, but is suggested as a precaution).
6. When your computer is restarted, connect the TSC2004EVM via a USB cable to the computer. Windows should recognize the new device, and *Found New Hardware Wizard* appears.
7. Select *Install from a list or specific location (Advanced)*, and click on Next>.
8. Select *Don't Search. I will Choose the driver to install*, and click on Next>.
9. If TSC2004EVM is inside the list of *Model*, click on it to select it. You are done.
10. Otherwise, if it is not there, click on *Have disk...*
11. Select *Browse ...*, find the TSC2004EVM.inf, which is included with the installer, and click on it.
12. Your PC should install it.
13. Click on Finish to finish the correction.
14. You are done! Run the TSC2004EVM software.

When installation is complete, attach a USB cable from your PC to the USB-MODEVM Interface board. As configured at the factory, the board is powered from the USB interface; so, the power indicator LEDs on the USB-MODEVM should light. Once this occurs, launch the TSC2004 evaluation software on your PC.

The software should automatically find the TSC2004EVM, and a window box, similar to the one in Figure 2 should appear.

Check the corresponding A0/A1 box, if TSC2004EVM JMP5/JMP6 is removed (high). By default, both A0 and A1 should be unchecked. Click on the *OK* button to continue, and the interface GUI (Figure 3) appears.

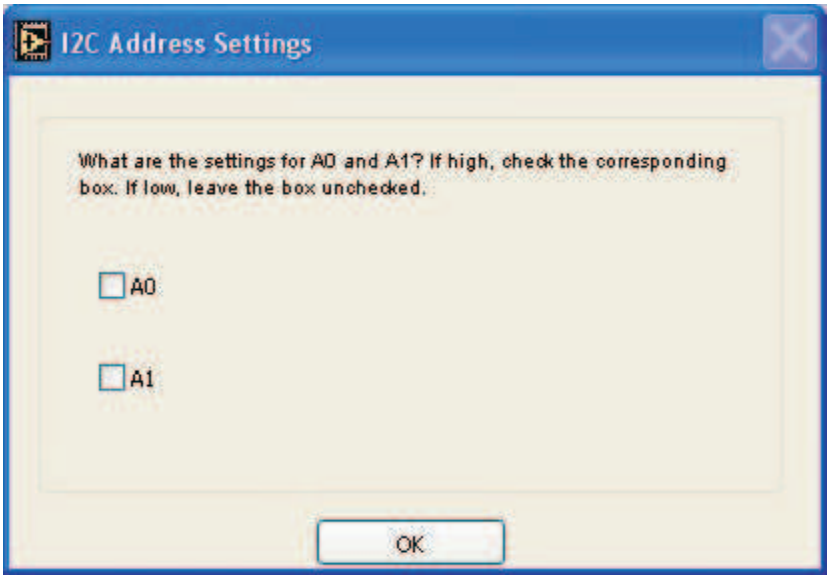

Figure 2. I²C Address Settings

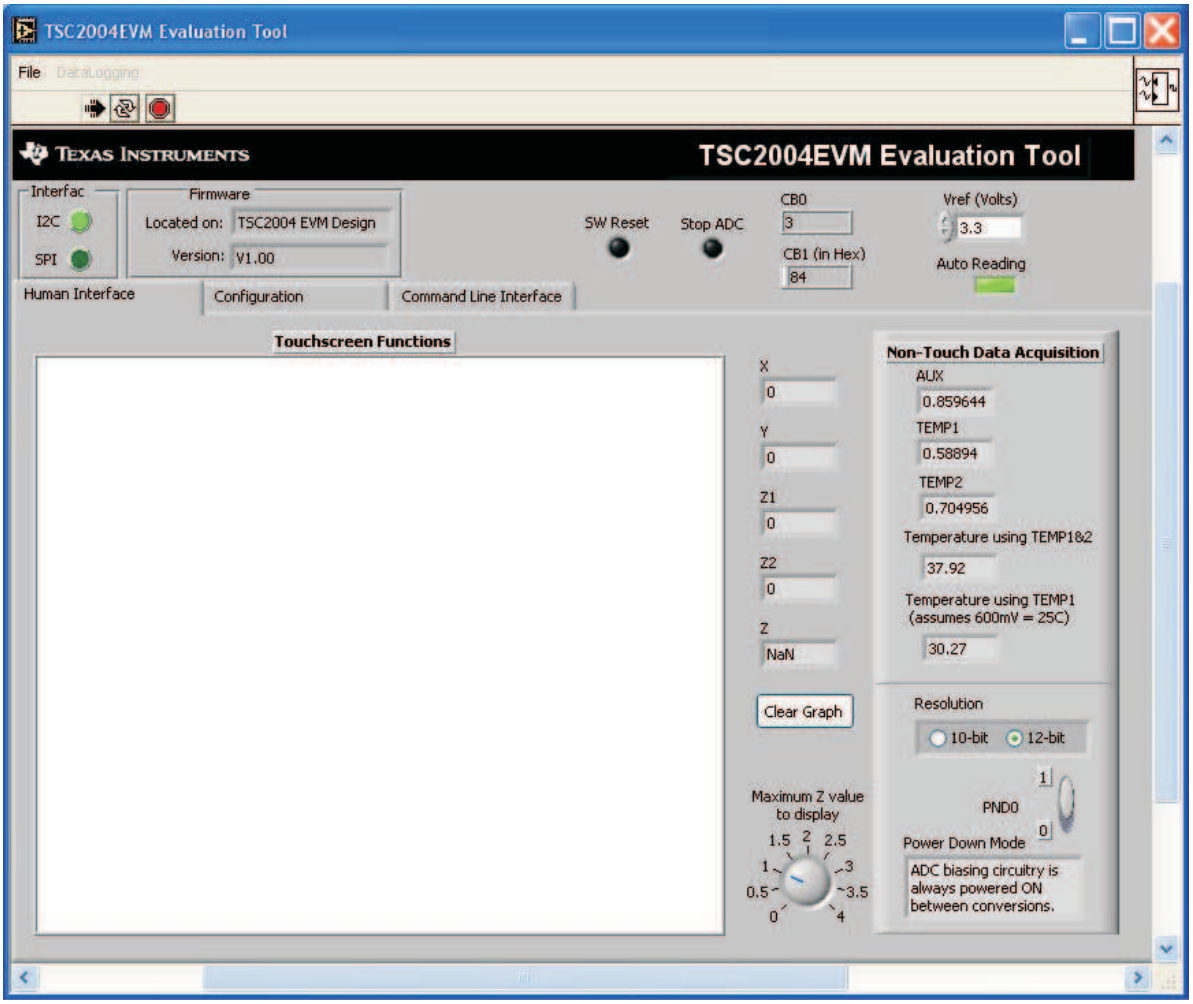

Figure 3. Interface GUI

In order to use the touch screen features, a 4-wire resistive touch screen needs to be connected to J1 of the TSC2004EVM, as described previously. That is: the 4 wires of the touch panel should be connected to the pins 2 (X+), 4(X–), 6(Y+), and 8(Y–) of J1A on the TSC2004EVM board.

6.3 USB-MODEVM Interface Board

The simple diagram shown in Figure 1 shows only the basic features of the USB-MODEVM Interface Board. The board is designed for a TAS1020B USB controller with an 8052-based core. It features two positions for modular EVMs, or one double-wide serial modular EVM can be installed.

For use with the TSC2004, the TSC2004EVM is installed in the topmost EVM slot, which connects the TSC2004 digital control interface to the I^2C port of the TAS1020B. Because the TSC2004 has no audio features, the lower EVM slot (which is connected to the TAS1020B digital audio interface) is not used.

As configured from the factory, the board is ready to use with the TSC2004EVM. However, if external I^2C control is desired, the signals may be applied to J6. To view all the functions and configuration options available on this board, see the USB-MODEVM Interface Board schematic in Section 7.2.

6.4 Program Description

After the TSC2004EVM-PDK software installation (described in Section 6.2), evaluation and development with the TSC2004 can begin.

Running the TSC2004EVM-PDK software on your PC displays the interface GUI as shown in Figure 3. On the top-left side of the GUI, a lit green LED indicates the digital serial interface type, which should be I^2C for the TSC2004EVM-PDK. The next box shows the location and version of the firmware.

The two LEDs around the top center of the GUI can be used to reset TSC2004 by software and to stop the TSC2004's ADC operation. Note that the two LEDs reflect the corresponding bits inside the CB1. When the *SW Reset* LED is lit (in blue), the bit 1 of CB1 is set to logic 1 and TSC2004 is in the software reset mode; when the LED is OFF (in black), the bit 1 is set to logic 0 and TSC2004 is not reset and is in normal mode. When the *Stop ADC* LED is lit (in red), the bit 0 of the CB1 is set to logic 1 and TSC2004's ADC is stopped. When this LED is OFF (in black), the bit 0 is logic 0 and TSC2004 is running in normal operating mode.

On the top-right side of the GUI, two boxes labeled CB0 and CB1 display the current/default settings of the TSC2004 control byte mode 0 (CB0) and mode 1 (CB1), respectively. See the TSC2004 data sheet on the control byte and its two modes.

The data in CB0 is written to TSC2004 while writing to a control register, and CB0 is the command byte. The data in CB1 is written to TSC2004 while one of the following occurs:

- Bit 0 (STS or Stop ADC) is set by clicking on the LED in left/top corner.
- Bit 1 (SWREST or SW Reset) is set by clicking on the SW Reset LED.
- Bit 2 (RM or Resolution) is set at the Human Interface tab.
- Bits 3 through 6 (Converter Function Select) can be set at the Configuration tab beneath the CFR1 section.

The majority evaluation can be implemented using three tabs on the TSC2004EVM GUI: Human Interface, Configuration, and Command Line Interface. Clicking on a tab accesses the functions corresponding to the tab. The following discussion details the three tabs.

6.4.1 Human Interface Tab

The Human Interface tab is shown in Figure 3.

6.4.1.1 Touch Screen Control Function

The touch screen box in this tab is updated when a touch is detected on the touch screen. As the touch screen is drawn on, the motion on the touch screen is translated into pixels on this box. The software takes X, Y, Z1, and Z2 readings which are shown to the right of the touch screen box. As the touch pressure is increased, the pixel size increases; a lighter touch results in thinner pixel sizes.

The Z-value displayed is not totally what is described in the TSC2004 data sheet, because in the data sheet equations, it is assumed that the resistance of the touch screen being used is known. The value used in this program is calculated by Equation 1 of the TSC2004 data sheet, but without multiplying it by the $R_{x\text{-plate}}$ resistance. This value is shown as *Z* beneath the measured touch data, X, Y, Z1, and Z2; and normally ranges from 0 to 4, with larger numbers representing a more forceful press on the screen. Using the **Maximum Z Value to Display** knob, you can set a threshold so that the program does not display lightly pressed points. This threshold setting helps to eliminate display of spurious points that may result from touch screen mechanical bouncing.

The display in the touch screen box can be cleared by pressing the **Clear Graph** button on the screen.

6.4.1.2 Data Acquisition Functions

The TSC2004 provides for measuring an auxiliary-input voltage and the temperature. A data acquisition functions on this tab displays the measured values for these parameters. Measurements are updated only when the touch screen is not being pressed, and the Auto Reading LED is on.

Temperature is displayed using both measurement modes described in the TSC2004 data sheet. Using the TEMP1 and TEMP2 measurements, a temperature reading with 2°C resolution and accuracy is achieved. Using only the TEMP1 measurement, a reading with 0.3°C resolution is possible, but requires knowing the TEMP1 value at 25°C. This normally requests a calibration that the user performs. This program assumes that TEMP1 = 600 mV at 25°C.

By default, the software continuously reads nontouch data, AUX, TEMP1, and TEMP2 and automatically updates them in the Non-Touch Data Acquisition section of this tab. To stop the data acquisition, click on the green LED Auto Reading in the top-right corner.

Both AUX and temperature measurements need reference voltage, which is provided to the TSC2004 V_{REF} pin. The V_{ref} (volts) controller box can be written with the corresponding V_{ref} voltage.

6.4.1.3 Direct Configuration

In the TSC2004, the parameters or modes of the device can be set up or configured in two ways. One is to set up the control registers; the other is to write directly to TSC2004 through control bytes. The majority setups and status of the TSC2004 can be accessed through write/read TSC2004 control registers; also a couple of parameters/modes can be accessed through the direct configuration, which include Resolution, ADC Power-Down, ADC Stop, and SW Reset. See the data sheet for more details.

In the Human Interface tab, two direct configuration modes can be accessed: one is resolution; and another is ADC Power-Down mode.

The TSC2004 ADC can be configured to operate in 10-bit or 12-bit resolution modes, which can be directly configured using Control Byte Mode #1 or CB1 or by writing to the bit #13 of control register CFR0. Clicking on the resolution option in this tab changes the resolution setting in CB1. Note that the CB1 box on the top of the tabs is updated correspondingly while any of its control bits changes. You may also need to change the resolution setting in CFR0 (which is discussed in the next section on the Configuration tab) to make them consistent.

A Power-Down bit in TSC2004 Control Byte Mode#0 or CB0 can be set from this tab to power up the ADC biasing circuitry always, or to power down the power between conversions. The box under the control button *PND0* shows the brief description.

6.4.2 Configuration Tab

On the Configuration tab, shown in Figure 4, all of the TSC2004 control registers can be accessed and written to.

The tab has four sections, corresponding to the configuration registers CRF0, CFR1, CFR2, and the four thresholds registers, respectively. Also, two boxes, one under the *CFR1* section and the other under the *Threshold Selection* section, display the current values writing to these TSC2004 control/configuration registers.

Note that a digital box is next to each of these multiple selectors; clicking on this box sends the data to the corresponding control registers.

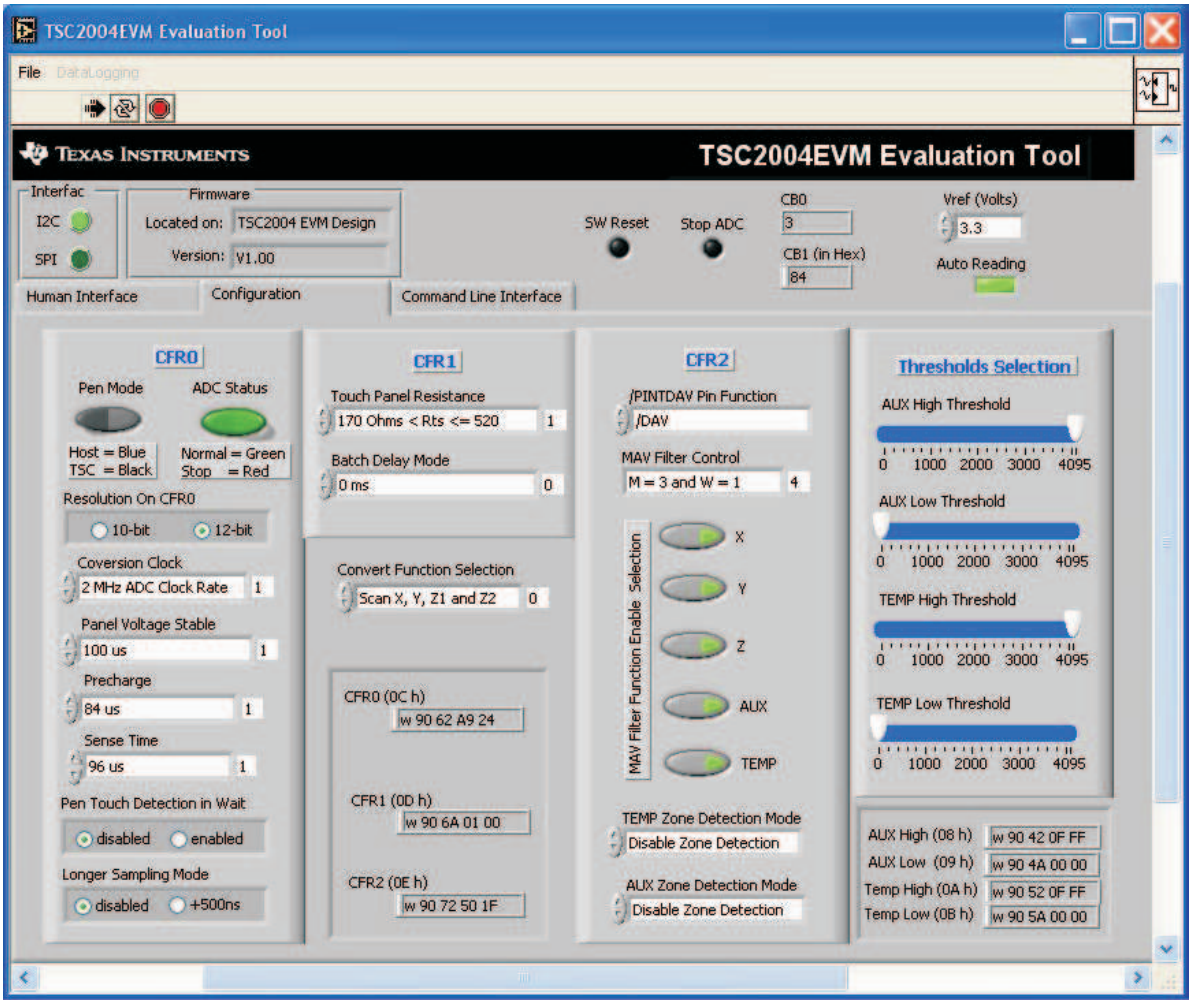

Figure 4. Configuration Tab of Software GUI Screen

6.4.2.1 ADC Configuration (CFR0)

This section controls the parameters in CFR0. Each button or selection controls one parameter.

- Pen Control Mode
  The button controls if the touch data acquisition is started or initialized by host processor's command (manually) or by a touch on the screen (automatically). Default by touching screen.
- Stop ADC
  This button can stop TSC2004 ADC, or put the ADC to normal running mode. Default to normal running mode.
- Resolution
  Selects between 10- and 12-bit resolution. Note that, the bit #2 of CB1 also controls the resolution and thus you may need to double-check the settings at both places to make sure they are consistent. Default setting is 12-bit resolution.
- Conversion Clock
  The internal clock which runs the A/D converter can run at 4, 2, or 1 MHz. Note that, when running at 4 MHz, only 10-bit resolution is possible, but 12-bit is not. Thus, you may need to check resolution setting after selecting 4-MHz conversion clock. By default, the clock is running at 2 MHz.
- Panel Voltage Stabilization Time
  This is the time that the TSC2004 allows for the touch screen to settle after turning the drivers on.
- Precharge Time

- Sense Time
  These two parameters are the time allowed to precharge the touch panel capacitance and then sense to see if the screen is touched. For more details on these parameters, see the TSC2004 data sheet.
- Detection of Pen Touch in Wait
  This option is valid when the ADC is put into the host-controlled mode. Enabling this option puts the pen touch detection in the background and allows the TSC2004 to pull its PINTDAV pin high if no pen touch is detected while waiting for the host to issue a command, so that the host can decide if a reading touch data command should or should not be issued.
- Longer Sample Mode
  Enabling this option adds an extra 500 ns of sampling time to the normal sampling cycle. It is disabled by default.

6.4.2.2 Test Mode Configuration (CFR1)

TSC2004 features a touch screen test function to check if the 4-wire touch panel had been properly connected and if there is short-circuitry. To implement the connection test, the resistance range of the touch screen should be entered into CFR1. Select *Short Circuit Panel Test* to perform the short-circuitry test function.

To perform a touch screen test, the Converter Function Selection must be set up in CB1 as X-Axis Connection Test, Y-Axis Connection Test, or Short-Circuit Test. The multiple selector under CFR1 provides the access.

The test result returns to the STATUS register.

Another TSC2004 feature is the *Batch Delay Mode*, as shown in the CFR1 section. Under the TSC-controlled ADC mode, this feature adds delay between ADC samples and thus controls the time/interval between samples. The batch delay ranges from 0 ms to 100 ms.

6.4.2.3 MAVF Configuration (CFR2)

The preprocessing MAV filter (MAVF) inside TSC2004 reduces sampling noise. See the data sheet for details of the MAVF.

The CFR2 section has five selection buttons that can be used to enable/disable the MAVF on touch data, X, Y, and Z, or nontouch data, AUX and Temperature.

Clicking on the *MAV Filter Control* option box brings up a list of settings on M and W values. Select an eligible option from the list (do not select the *Reserved*) and the corresponding digital shows up at the next box. Clicking on the digital box writes the selected value to the CFR2 register.

6.4.2.4 Threshold Configuration

Zone detection is one of the new features the TSC2004 offers. Zone detection function was designed to monitor the zone/range of the nontouch inputs, including AUX and TEMP1/TEMP2.

The four control registers inside TSC2004, used to set up the top and bottom thresholds of AUX and TEMP1/TEMP2, can be accessed through the four moving slides in the *Threshold Selection* section. The zone detection modes can be controlled/selected through the two option boxes at the bottom of the CFR2 section.

6.4.3 Command Line Interface Tab

Clicking on *Command Line Interface* tab brings up a screen as shown in Figure 5, which provides a flexible way to read and write to the TSC2004EVM by scripting.

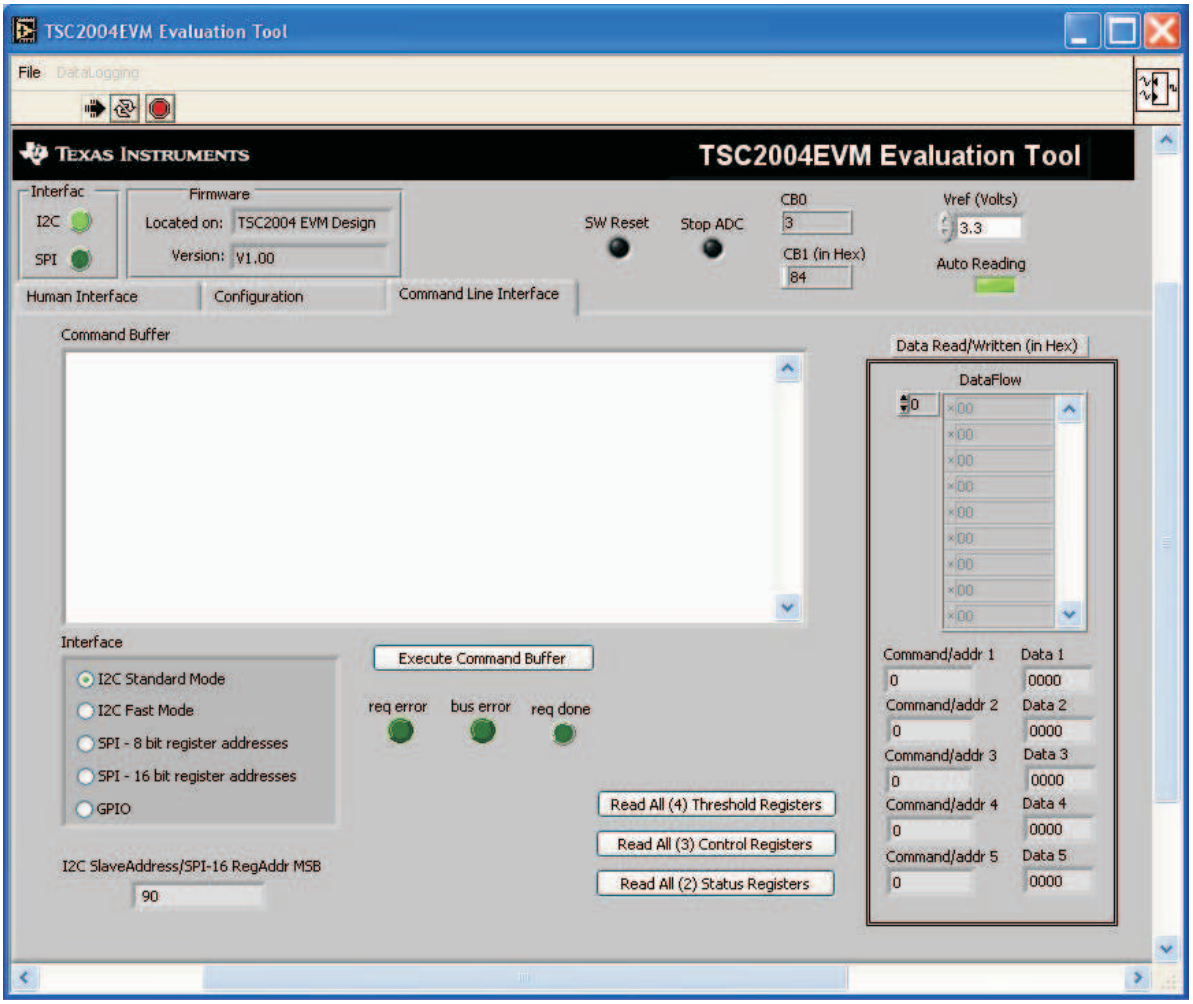

Figure 5. Command Line Interface Tab

The line or lines of the script are typed or loaded into the *Command Buffer*. Then, clicking on the *Execute Command Buffer* button runs the script.

The three LEDs on this tab and the *req done* LED light up (green) after the script execution is finished. If a line of the script is a reading command, the read data is shown at the *Read Data* section; if the line of the script is a writing command, the written data bytes also are returned to the *Read Data* section.

As Figure 6 shows, three read buttons reveal the contents of the threshold, control, and status registers of the TSC2004, displaying them in the *Data Read/Written* section of the screen. The data flow shows on the top and is interpreted and listed correspondingly on the button

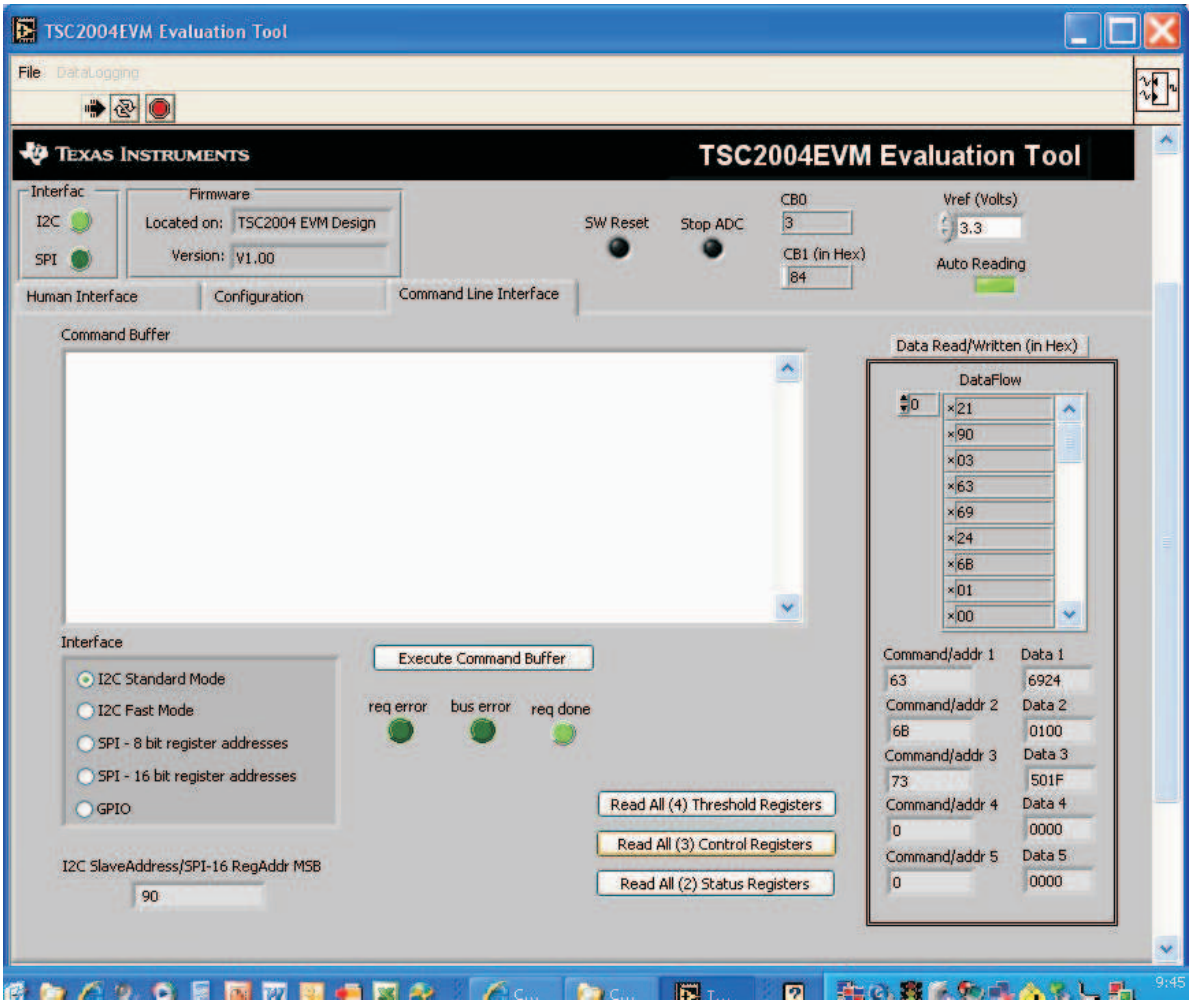

Figure 6. Read All Threshold Registers

6.4.3.1 Software Script

The TSC2004EVM-PDK software was designed to identify and decipher several scripting commands, as shown in the *Command Type* list in Table 6.

Each line in a script file is a command; a line is terminated by a carriage return.

Table 6. Script Command Type

Command Type	Description
w	Write to TSC2004 through the SPI serial control bus
r	Read from TSC2004 through the SPI serial control bus
#	Comment line
b	Break
d	Delay

- The first character of a line indicates the command type. Table 6 lists all the command types of the TSC2004EVM-PDK software.
- Following the command type *w* or *r*, the byte is the I^2C device address. For TSC2004, this is [1001 0A1A0R/W]b, where A1A0 is 00b by default and can be changed by JMP6/JMP5; and the LSB R/W is 1 if read or 0 if write.

No byte follows a # (comment) or a *b* (break) command.
The byte or bytes following a command type *d* is the delay time in milliseconds.

- The second byte in a *w* or *r* command line is the address of the configuration register. Table 7 provides the common use address in a *w* and *r* command line.

Table 7. Eligible TSC2004 Configuration Register Address (in Hexadecimal)

Description		*w/r*
Control Byte Mode 1	Stop ADC	81
	SW Reset TSC2004	82
	Measure XYZ	80 or 84 (1)
	Measure XY	88 or 8C (1)
	Measure AUX	A0 or A4 (1)
	MeasureTEMP1	B0 or B4 (1)
	MeasureTEMP2	B8 or BC (1)
Control Byte Mode 0 And/Or Control Registers	X Data Register	00 or 02 (2)
	Y Data Register	08 or 0A (2)
	Z1 Data Register	10 or 12 (2)
	Z2 Data Register	18 or 1A (2)
	AUX Data Register	20 or 22 (2)
	TEMP1 Data Register	28 or 2A (2)
	TEMP2 Data Register	30 or 32 (2)
	Status Register	38 or 3A (2)
	AUX High Threshold Register	40 or 42 (2)
	AUX Low Threshold Register	48 or 4A (2)
	TEMP High Threshold Register	50 or 52 (2)
	TEMP Low Threshold Register	58 or 5A (2)
	CFR0 Register	60 or 62 (2)
	CFR1 Register	68 or 6A (2)
	CFR2 Register	70 or 72 (2)
	Convert Function Select Status Register	78 or 7A (2)

(1) Where the first byte is for 10 bits of resolution and the second byte is for 12 bits.
(2) Where the two bytes reflect the different ADC bias power modes: if bit2 =1, ADC bias power ON always; and if bit2=0, it powered down between converter.

In an *r* command, the byte after the address indicates the number of registers reading from; and the next byte is ignored. If more than one register needs to be read, the next byte is the address and is followed by two dummy bytes that are ignored.

In a *w* command, the two bytes after the address (see Table 7) are the data writing to the 16-bit TSC2004 registers. If more than one registers needs to be written, the next byte is the address and followed by two data bytes.

For writing to TSC2004's CB1, this byte includes both address and content and thus there will be no further byte after this address byte.

Example 1: Writing to CB1 and changing the resolution mode to 10 bit.

w 90 80

Example 2: Writing 0xA924 to CFR0 register and writing to CB0 to set ADC bias power on always.

w 90 62 A9 24

Example 3: Do the same as Example 2, but writing to CB0 to set ADC bias power OFF between converter.

w 90 60 A9 24

Example 4: Writing the four threshold registers to set up the max=0xFF0 and min=0x00F.

w 90 42 0F F0 4A 00 0F 52 0F F0 5A 00 0F

Example 5: Reading the STATUS register content.
r 91 38 01 00

Example 6: Reading back X, Y, Z1, and Z2 data registers.
r 91 02 04 00 0A 00 00 12 00 00 1A 00 00

6.4.3.2 Down Load Script

To down load an existing script into the *Control Buffer*, first go into the *File* menu, and select *Open Command File...*, which opens a file-select window and allows you to browse and find a script file. Then, click on Open and the script is loaded into the command buffer. An example is shown in Figure 7.

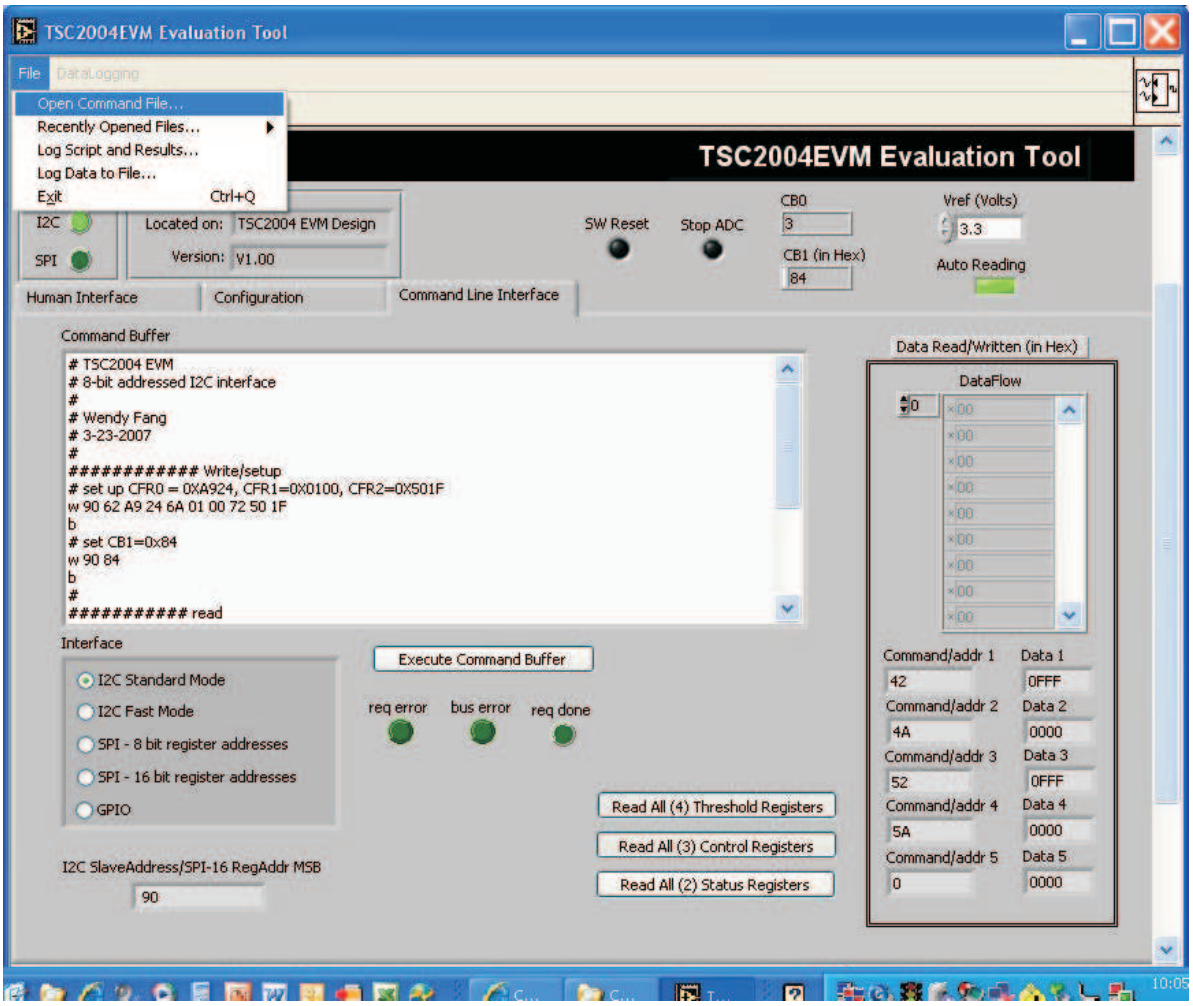

Figure 7. Open Script File and Load to Command Buffer

6.4.4 Log Script and Data

The software can track and record the script or data used while using the TSC2004EVM GUI. In the *File* menu, *Log Script and Results* ... or *Log Data to File* ... can be selected to generate the script or data log file.

6.4.4.1 Log Script and Results

Go into the *File* menu and select *Log Script and Results*..., which opens a file-select window and allows you to specify a log file to which to write the script and results. At this point, the script to read/write and the results start to be logged into the file. For example, a written script is logged into the file for any action performed at the Configuration Tab (Section 6.4.2); and a reading script and the reading results are logged into the file if one of the read buttons on the Command Line Interface Tab (Section 6.4.3) is clicked.

6.4.4.2 Log Data to File

Go into the *File* menu and select *Log Data to File* ..., which opens a file-select window and allows you to specify a log file to which to write the data. At the same time, this enables the *Datalogging* menu.

When ready to begin recording data to a file, select *Datalogging→Start Logging* Data is written to the file until *Datalogging→Stop Logging* is selected. When the screen is not touched, the AUX, TEMP1, and TEMP2 values are written to the file; the X, Y, Z1, and Z2 parameters are written to the file with values of 9999, to indicate that they are not updated. When the screen is touched, the X, Y, Z1, and Z2 parameters are written while the AUX, TEMP1, and TEMP2 values are written to the file as 9999.

The format of the data file has the first column as the time in milliseconds (which is just a timer in the program and can arbitrarily start at any number); then X, Y, Z1, Z2, AUX, TEMP1, and TEMP2 columns follow. Every new reading is a new row in the file.

After *Start Logging*, the data is constantly updated, and the datalog file can quickly grow large. Therefore, log only necessary data.

7 EVM Bill of Materials and Schematic

The following tables contain a complete bill of materials for the modular TSC2004EVM and the USB-MODEVM Interface Board (included only in the TSC2004EVM-PDK), respectively.

Table 8. TSC2004EVM Bill of Materials[(1)]

Designators	Quantity	Value	Description	Manufacturer	Mfg. Part Number
R1	1	0	1/8W 5% Chip Resistor	Panasonic	ERJ-6GEY0R00V
R3,R4	3	2.7kΩ	1/8W 5% Chip Resistor	Panasonic	ERJ-6GEYJ272V
R2,R5,R6,R7	4	20kΩ	1/8W 5% Chip Resistor	Panasonic	ERJ-6GEYJ203V
C7, C8, C9	3	0.1µF	16V Ceramic Chip Capacitor ±10%, X7R	TDK	C1608X7R1C104K
C6, C10	2	10µF	16V Ceramic Chip Capacitor ±20%, X7R	TDK	C3216X7R1C106M
C1-C5	5	Not installed			
U1	1		Touch Screen Controller	Texas Instruments	TSC2004IRTJ
U2	1		I^2C 64K EEPROM, 1.8V - 5.5V	Microchip	24AA64-I/SN
J1A, J2A	2		20 Pin SMT Plug	Samtec	TSM-110-01-L-DV-P
J3A	1		10 Pin SMT Plug	Samtec	TSM-105-01-L-DV-P
J1B, J2B	2		20 Pin SMT Socket	Samtec	SSW-110-22-F-D-VS-K
J3B	1		10 Pin SMT Socket	Samtec	SSW-105-22-F-D-VS-K
N/A	1		TSC2004 EVM PWB	Texas Instruments	6475517
JMP3, JMP5, JMP6	3		Terminal Strip, 2 pin (2x1)	Samtec	TSW-102-07-G-S
JMP1, JMP2	2		Terminal Strip, 3 pin (3x1)	Samtec	TSW-103-07-G-S
JMP4	1		Header, Terminal, 3x2	Samtec	TSW-103-07-G-D
L1, L2	2	100µH	SMT Inductor	API Delevan	S1210R-104K

(1) All components should be RoHS compliant. Some part numbers may be either leaded or RoHS. Verify purchased components are RoHS compliant.

Table 8. TSC2004EVM Bill of Materials (continued)

Designators	Quantity	Value	Description	Manufacturer	Mfg. Part Number
TP4	1		Testpoint, Mini-Loop	Keystone Electronics	5000
TP1-TP3, TP5-TP13	12	Not installed	Testpoint, Mini-Loop	Keystone Electronics	5000
N/A	6		Shorting Blocks	Samtec	SNT-100-BK-G-H

Table 9. USB-MODEVM Bill of Materials

Designators	Description	Manufacturer	Mfg. Part Number
R4	10Ω 1/10W 5% Chip Resistor	Panasonic	ERJ-3GEYJ100V
R10, R11	27.4Ω 1/16W 1% Chip Resistor	Panasonic	ERJ-3EKF27R4V
R20	75Ω 1/4W 1% Chip Resistor	Panasonic	ERJ-14NF75R0U
R19	220Ω 1/10W 5% Chip Resistor	Panasonic	ERJ-3GEYJ221V
R14, R21, R22	390Ω 1/10W 5% Chip Resistor	Panasonic	ERJ-3GEYJ391V
R13	649Ω 1/16W 1% Chip Resistor	Panasonic	ERJ-3EKF6490V
R9	1.5kΩ 1/10W 5% Chip Resistor	Panasonic	ERJ-3GEYJ152V
R1, R2, R3, R5, R6, R7, R8	2.7kΩ 1/10W 5% Chip Resistor	Panasonic	ERJ-3GEYJ272V
R12	3.09kΩ 1/16W 1% Chip Resistor	Panasonic	ERJ-3EKF3091V
R15, R16	10kΩ 1/10W 5% Chip Resistor	Panasonic	ERJ-3GEYJ103V
R17, R18	100kΩ 1/10W 5% Chip Resistor	Panasonic	ERJ-3GEYJ104V
RA1	10kΩ 1/8W Octal Isolated Resistor Array	CTS Corporation	742C163103JTR
C18, C19	33pF 50V Ceramic Chip Capacitor, ±5%, NPO	TDK	C1608C0G1H330J
C13, C14	47pF 50V Ceramic Chip Capacitor, ±5%, NPO	TDK	C1608C0G1H470J
C20	100pF 50V Ceramic Chip Capacitor, ±5%, NPO	TDK	C1608C0G1H101J
C21	1000pF 50V Ceramic Chip Capacitor, ±5%, NPO	TDK	C1608C0G1H102J
C15	0.1µF 16V Ceramic Chip Capacitor, ±10%,X7R	TDK	C1608X7R1C104K
C16, C17	0.33µF 16V Ceramic Chip Capacitor, +/-20%,Y5V	TDK	C1608X5R1C334K
C9, C10, C11, C12, C22, C23, C24, C25, C26, C27, C28	1µF 6.3V Ceramic Chip Capacitor, ±10%, X5R	TDK	C1608X5R0J105K
C1, C2, C3, C4, C5, C6, C7, C8	10µF 6.3V Ceramic Chip Capacitor, ±10%, X5R	TDK	C3216X5R0J106K
D1	50V, 1A, Diode MELF SMD	Micro Commercial Components	DL4001
D2	Yellow Light Emitting Diode	Lumex	SML-LX0603YW-TR
D3, D4, D6, D7	Green Light Emitting Diode	Lumex	SML-LX0603GW-TR
D5	Red Light Emitting Diode	Lumex	SML-LX0603IW-TR
Q1, Q2	N-Channel MOSFET	Zetex	ZXMN6A07F
X1	6MHz Crystal SMD	Epson	MA-505 6.000M-C0
U8	USB Streaming Controller	Texas Instruments	TAS1020BPFB
U2	5V LDO Regulator	Texas Instruments	REG1117-5
U9	3.3V/1.8V Dual Output LDO Regulator	Texas Instruments	TPS767D318PWP
U3, U4	Quad, Tri-State Buffers	Texas Instruments	SN74LVC125APW
U5, U6, U7	Single IC Buffer Driver with Open Drain o/p	Texas Instruments	SN74LVC1G07DBVR
U10	Single Tri-State Buffer	Texas Instruments	SN74LVC1G125DBVR
U1	64K 2-Wire Serial EEPROM I^2C	Microchip	24LC64I/SN
	USB-MODEVM PWB	Texas Instruments	6463995

Table 9. USB-MODEVM Bill of Materials (continued)

Designators	Description	Manufacturer	Mfg. Part Number
TP1, TP2, TP3, TP4, TP5, TP6, TP9, TP10, TP11	Miniature Test Point Terminal	Keystone Electronics	5000
TP7, TP8	Multipurpose Test Point Terminal	Keystone Electronics	5011
J7	USB Type B Slave Connector Thru-Hole	Mill-Max	897-30-004-90-000000
J1, J2, J3, J4, J5, J8	2 Position Terminal Block	On Shore Technology	ED555/2DS
J9	2.5mm Power Connector	CUI Stack	PJ-102B
J10	BNC Connector, Female, PC Mount	AMP/Tyco	414305-1
J11A, J12A, J21A, J22A	20-pin SMT Plug	Samtec	TSM-110-01-L-DV-P
J11B, J12B, J21B, J22B	20-pin SMT Socket	Samtec	SSW-110-22-F-D-VS-K
J13A, J23A	10-pin SMT Plug	Samtec	TSM-105-01-L-DV-P
J13B, J23B	10-pin SMT Socket	Samtec	SSW-105-22-F-D-VS-K
J6	4-Pin Double Row Header (2x2) 0.1"	Samtec	TSW-102-07-L-D
J14, J15	12-Pin Double Row Header (2x6) 0.1"	Samtec	TSW-106-07-L-D
JMP1-JMP4	2 Position Jumper, 0.1" spacing	Samtec	TSW-102-07-L-S
JMP8-JMP14	2 Position Jumper, 0.1" spacing	Samtec	TSW-102-07-L-S
JMP5, JMP6	3 Position Jumper, 0.1" spacing	Samtec	TSW-103-07-L-S
JMP7	3 Position Dual Row Jumper, 0.1" spacing	Samtec	TSW-103-07-L-D
SW1	SMT, Half-Pitch 2 Position Switch	C&K Division, ITT	TDA02H0SK1
SW2	SMT, Half-Pitch 8 Position Switch	C&K Division, ITT	TDA08H0SK1
	Jumper Plug	Samtec	SNT-100-BK-T

7.1 TSC2004EVM Schematic

TSC2004 EVM schematic diagram is provided as a reference.

7.2 USB-MODEVM Schematic

USB-MODEVM schematic diagram is provided as a reference.

8 References

1. *TSC2005, Nano-Power Touch Screen Controller with SPI Serial Interface* data sheet (SBAS379)
2. *TAS1020B, USB Streaming Controller* data manual (SLES025)
3. *REG1117/7A, 800mA and 1A Low Dropout Positive Regulator 1.8V, 2.5V, 2.85V, 3.3V, 5V, and Adjustable* data sheet (SBVS001)
4. *TPS767D3xx, Dual-Output Low-Dropour Voltage Regulators* data sheet (SLVS209)
5. *SN74LVC125A, Quadruple Bus Buffer Gate With 3-State Outputs* data sheet (SCAS290)
6. *SN74LVC1G125, Single Bus Buffer Gate With 3-State Output* data sheet (SCES223)
7. *SN74LVC1G07, Single Buffer/Driver With Open-Drain Output* data sheet (SCES296)

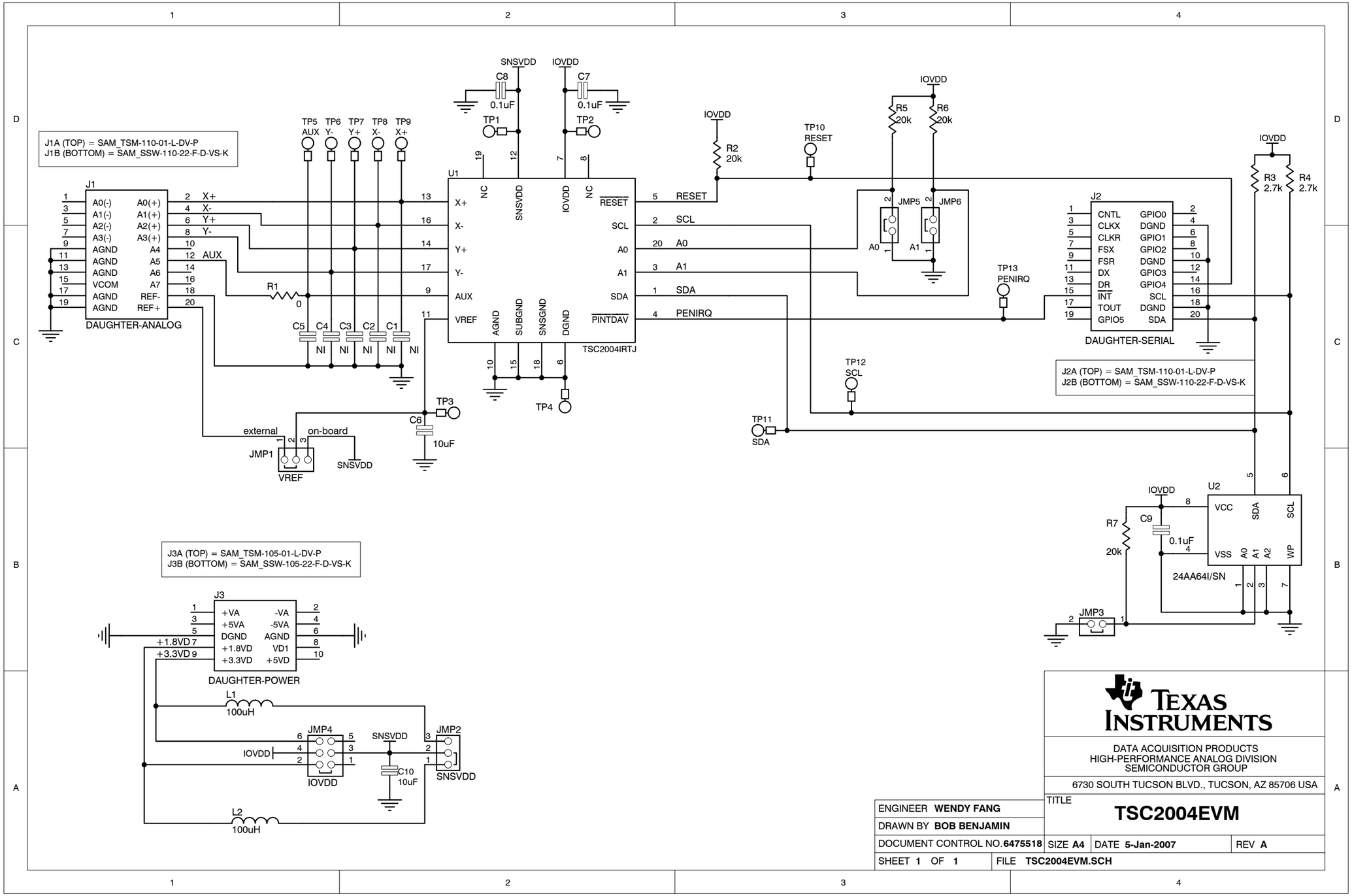

TEXAS INSTRUMENTS

DATA ACQUISITION PRODUCTS
HIGH-PERFORMANCE ANALOG DIVISION
SEMICONDUCTOR GROUP

6730 SOUTH TUCSON BLVD., TUCSON, AZ 85706 USA

ENGINEER **WENDY FANG**	TITLE **TSC2004EVM**		
DRAWN BY **BOB BENJAMIN**			
DOCUMENT CONTROL NO. **6475518**	SIZE **A4**	DATE **5-Jan-2007**	REV **A**
SHEET **1** OF **1**	FILE **TSC2004EVM.SCH**		

REVISION HISTORY		
REV	ENGINEERING CHANGE NUMBER	APPROVED

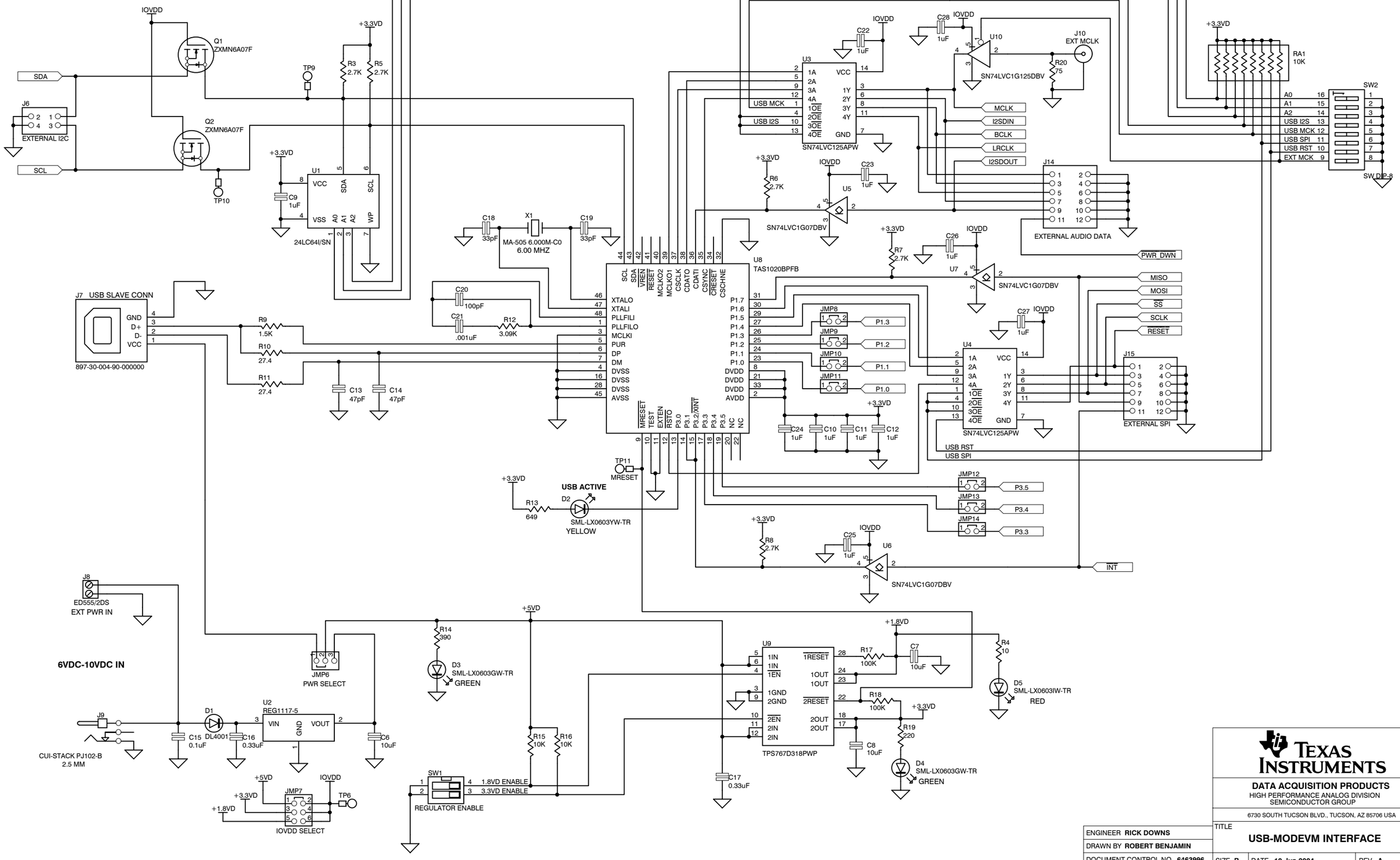

TEXAS INSTRUMENTS

DATA ACQUISITION PRODUCTS
HIGH PERFORMANCE ANALOG DIVISION
SEMICONDUCTOR GROUP

6730 SOUTH TUCSON BLVD., TUCSON, AZ 85706 USA

TITLE **USB-MODEVM INTERFACE**

ENGINEER **RICK DOWNS**			
DRAWN BY **ROBERT BENJAMIN**			
DOCUMENT CONTROL NO. **6463996**	SIZE **B**	DATE **10-Jun-2004**	REV **A**
SHEET **1** OF **2**	FILE **G:\USB Motherboard - Modular Evm\Schematic\USB Motherboard - ModEvm.ddb - Docume**		

REVISION HISTORY		
REV	ENGINEERING CHANGE NUMBER	APPROVED

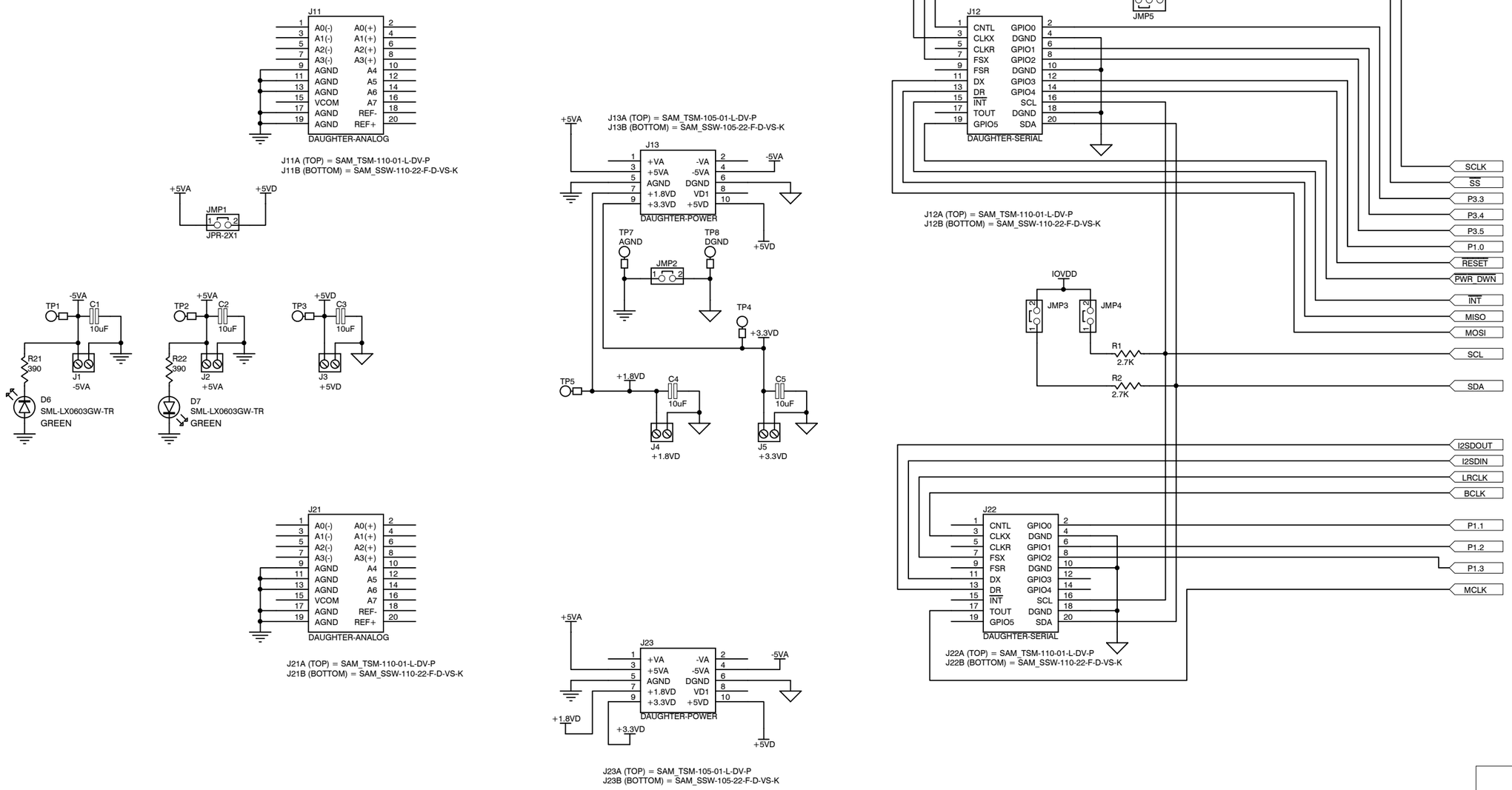

TEXAS INSTRUMENTS

DATA ACQUISITION PRODUCTS
HIGH-PERFORMANCE ANALOG DIVISION
SEMICONDUCTOR GROUP

6730 SOUTH TUCSON BLVD., TUCSON, AZ 85706 USA

TITLE **USB-MODEVM INTERFACE**

ENGINEER **RICK DOWNS**		
DRAWN BY **ROBERT BENJAMIN**		
DOCUMENT CONTROL NO. **6463996**	SIZE **B**	DATE **10-Jun-2004**	REV **A**
SHEET **2** OF **2**	FILE **G:\USB Motherboard - Modular Evm\Schematic\USB Motherboard - ModEvm.ddb - Docume**	

EVALUATION BOARD/KIT IMPORTANT NOTICE

Texas Instruments (TI) provides the enclosed product(s) under the following conditions:

This evaluation board/kit is intended for use for **ENGINEERING DEVELOPMENT, DEMONSTRATION, OR EVALUATION PURPOSES ONLY** and is not considered by TI to be a finished end-product fit for general consumer use. Persons handling the product(s) must have electronics training and observe good engineering practice standards. As such, the goods being provided are not intended to be complete in terms of required design-, marketing-, and/or manufacturing-related protective considerations, including product safety and environmental measures typically found in end products that incorporate such semiconductor components or circuit boards. This evaluation board/kit does not fall within the scope of the European Union directives regarding electromagnetic compatibility, restricted substances (RoHS), recycling (WEEE), FCC, CE or UL, and therefore may not meet the technical requirements of these directives or other related directives.

Should this evaluation board/kit not meet the specifications indicated in the User's Guide, the board/kit may be returned within 30 days from the date of delivery for a full refund. THE FOREGOING WARRANTY IS THE EXCLUSIVE WARRANTY MADE BY SELLER TO BUYER AND IS IN LIEU OF ALL OTHER WARRANTIES, EXPRESSED, IMPLIED, OR STATUTORY, INCLUDING ANY WARRANTY OF MERCHANTABILITY OR FITNESS FOR ANY PARTICULAR PURPOSE.

The user assumes all responsibility and liability for proper and safe handling of the goods. Further, the user indemnifies TI from all claims arising from the handling or use of the goods. Due to the open construction of the product, it is the user's responsibility to take any and all appropriate precautions with regard to electrostatic discharge.

EXCEPT TO THE EXTENT OF THE INDEMNITY SET FORTH ABOVE, NEITHER PARTY SHALL BE LIABLE TO THE OTHER FOR ANY INDIRECT, SPECIAL, INCIDENTAL, OR CONSEQUENTIAL DAMAGES.

TI currently deals with a variety of customers for products, and therefore our arrangement with the user **is not exclusive.**

TI assumes **no liability for applications assistance, customer product design, software performance, or infringement of patents or services described herein.**

Please read the User's Guide and, specifically, the Warnings and Restrictions notice in the User's Guide prior to handling the product. This notice contains important safety information about temperatures and voltages. For additional information on TI's environmental and/or safety programs, please contact the TI application engineer or visit www.ti.com/esh.

No license is granted under any patent right or other intellectual property right of TI covering or relating to any machine, process, or combination in which such TI products or services might be or are used.

FCC Warning

This evaluation board/kit is intended for use for **ENGINEERING DEVELOPMENT, DEMONSTRATION, OR EVALUATION PURPOSES ONLY** and is not considered by TI to be a finished end-product fit for general consumer use. It generates, uses, and can radiate radio frequency energy and has not been tested for compliance with the limits of computing devices pursuant to part 15 of FCC rules, which are designed to provide reasonable protection against radio frequency interference. Operation of this equipment in other environments may cause interference with radio communications, in which case the user at his own expense will be required to take whatever measures may be required to correct this interference.

EVM WARNINGS AND RESTRICTIONS

It is important to operate this EVM within the input voltage range of 0 V to 3.6 V and the output voltage range of 0 V to 3.6 V.

Exceeding the specified input range may cause unexpected operation and/or irreversible damage to the EVM. If there are questions concerning the input range, please contact a TI field representative prior to connecting the input power.

Applying loads outside of the specified output range may result in unintended operation and/or possible permanent damage to the EVM. Please consult the EVM User's Guide prior to connecting any load to the EVM output. If there is uncertainty as to the load specification, please contact a TI field representative.

During normal operation, some circuit components may have case temperatures greater than 30°C. The EVM is designed to operate properly with certain components above 85°C as long as the input and output ranges are maintained. These components include but are not limited to linear regulators, switching transistors, pass transistors, and current sense resistors. These types of devices can be identified using the EVM schematic located in the EVM User's Guide. When placing measurement probes near these devices during operation, please be aware that these devices may be very warm to the touch.

Mailing Address: Texas Instruments, Post Office Box 655303, Dallas, Texas 75265
Copyright © 2006, Texas Instruments Incorporated